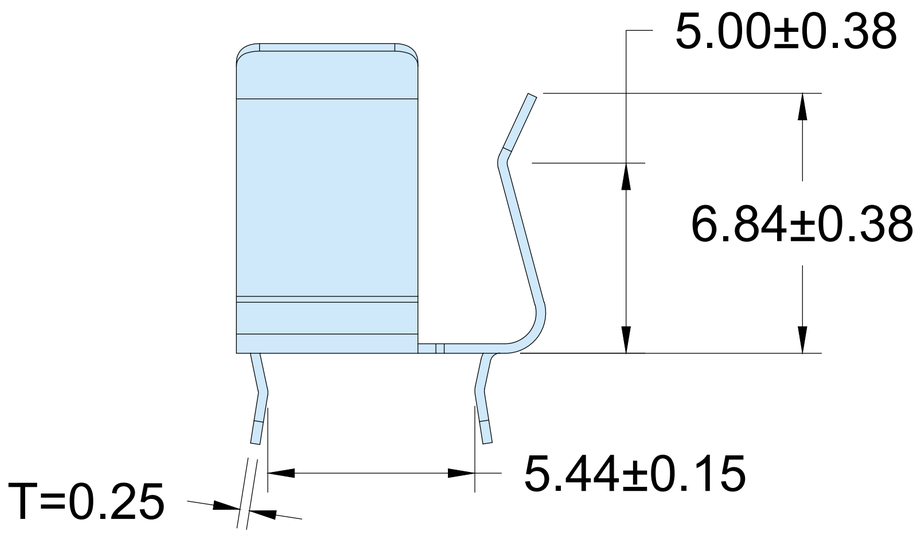

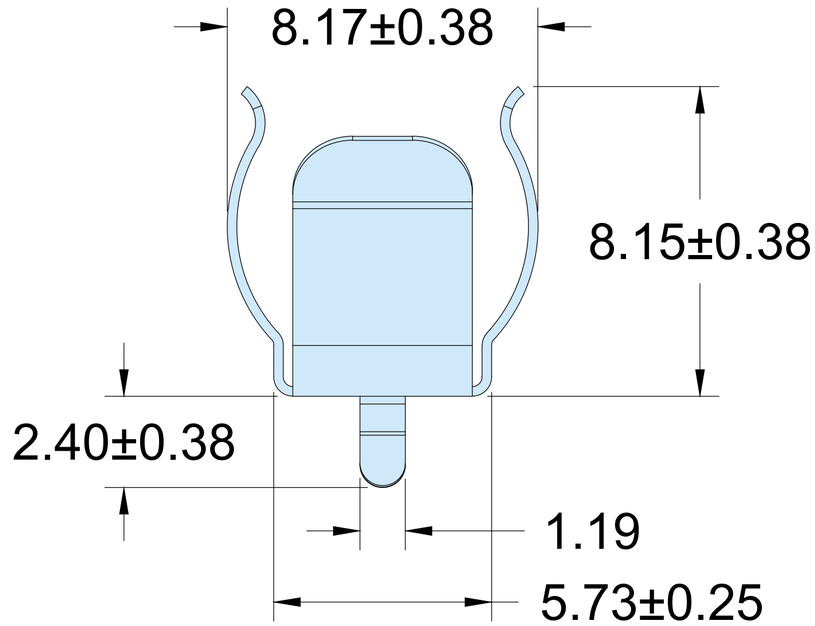

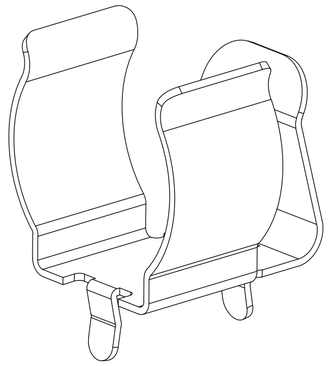

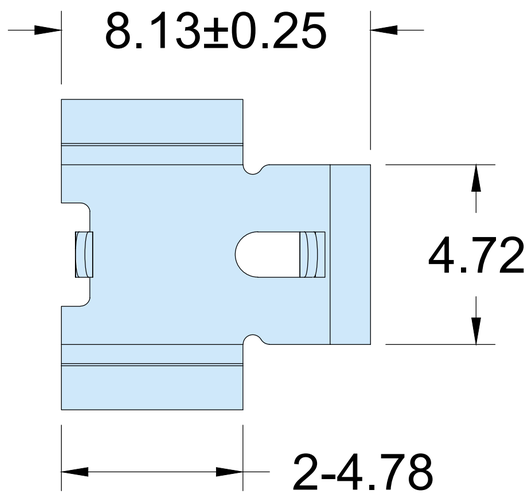

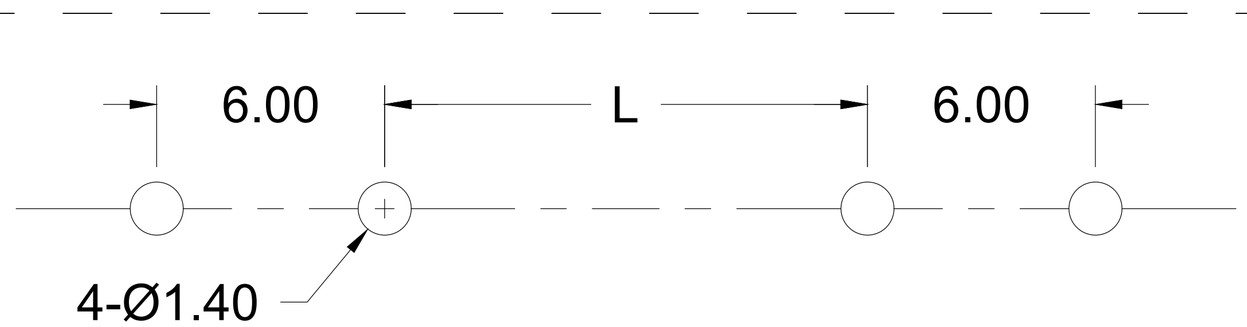

MOUNTING PAD LAYOUT

BATTERY SIZE	"L" DIMENSION
"AAAA"	27.2
"27A"	12.7

NOTES:
1.RoHS COMPLIANT

DATE	DESCRIPTION/ECN	REV.

DRAWN DAVID	DATE 30/JAN/17	Shenzhen Jiatel Hardware Electronics Co.,Ltd.	
CHECKED ALEN	DATE 30/JAN/17		
APPROVED JASON	DATE 30/JAN/17	TITLE AAAA BATTERY CLIP.THM	PART NO. JT-BC-AAAA-KS51
ANGLE		DIMENSIONS ARE IN MILLIMETRES OR DEGREES. LINEAR&ANGULAR TOLERANCES XX. ±0.50 XX.X ±0.20 ANGULAR XX.XX ±0.10 XX.XXX ±0.05 ±1° GENERAL TOLERANCES PER ISO 2768-K	SCALE 1:1 / SIZE A4 / MATERIAL SPRING STEEL
DWG NO. BCKS51-NI			SHEET 1OF 1 / REV A / FINISH NICKEL PLATE