版次	ECN. NO.	修改内容	日期	修改人
A		NEW	2020-05-07	PanSon

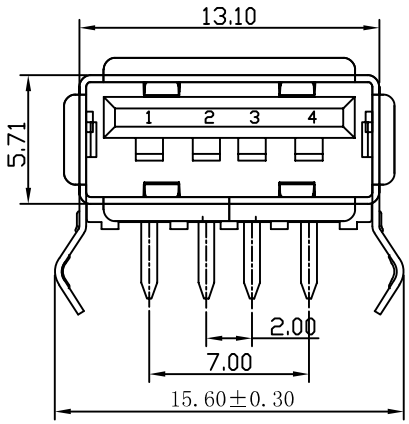

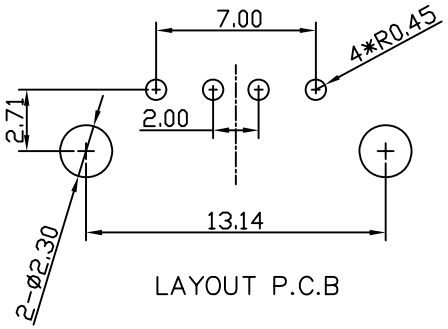

LAYOUT P.C.B

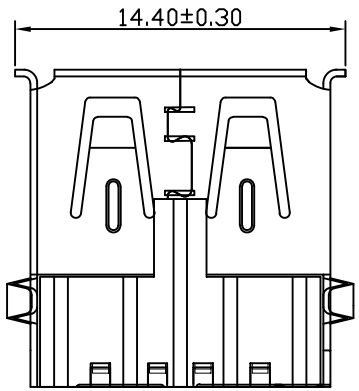

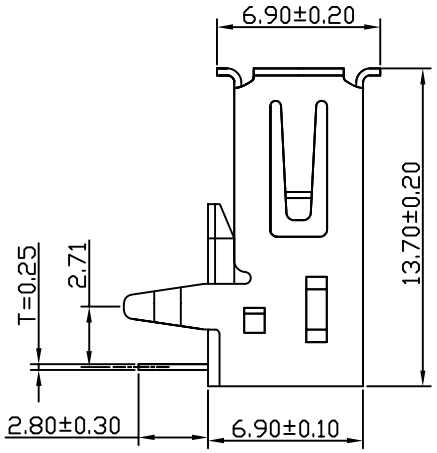

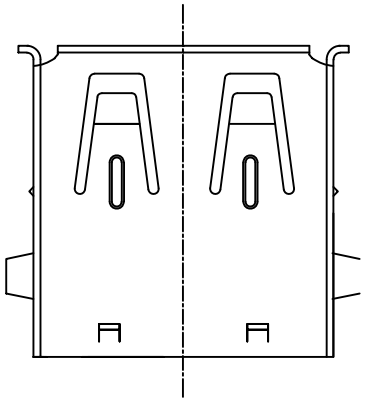

规格说明:Specifications:

电气特性:Electrical:

1. 额定电流：Current Rating
   1.5A/contact terminal
2. 额定电压：Voltage Rating
   30V DC
3. 接触阻抗:Contact Resistance
   30 milliohms MAX
4. 耐电压:Dielectnic Withstanding Voitage:
   500 V AC AT Sea Levol
5. 绝缘阻抗:Lnsulation Resistance:
   1000MEGA ohms MIN

物理性能:Mechanical:

1. 插拔力：Cnnector Mate and Unmate Force
   Mate force:35N(MAX)
   Unmate force:5N(MIN)

原材料:Matorial:

1. 塑胶:Housing:
   Hing Temperature Tnermaplastics,
   U1 94V-0 白色
2. 端子:Contact:黄铜 C2680
3. 外壳:Shell: SPCC

电镀:Finish:

1. 端子:Contact: Piated Gold G/F in Mating Area;
   Tin On Solder Talls
2. 外壳:Shell:
   Nickel Plating

PIN NO	SIGNAL ASSIGNMENT
PIN 1#	VBUS
PIN 2#	D-
PIN 3#	D+
PIN 4#	PGND

DIM	TOL
X.	±0.35
X.X	±0.25
X.XX	±0.20
X.XXX	±0.15
X°.	±5.0°
X.X°	±4.0°
X.XX°	±3.0°
X.XXX°	±2.0°

Shenzhen Jiatel Hardware Electronics Co.,Ltd
www.jiatel.com

产品名称(TITLE): USB A F 弯脚无卷边			料号(Suppliep P/N):GUA04F-HB08-R			
绘图(Designed)	审核(Checked)	批准(Approved)	图号(DWG NO.): UA-008			
PanSon		D.J.JIE	第三角视图	SCALE NONE	SHEET 1/1	REV. A	UNITS mm