REV.	ECN NO	LOCATIONS	DESCRIPTION	DATE	REVISER	APPD

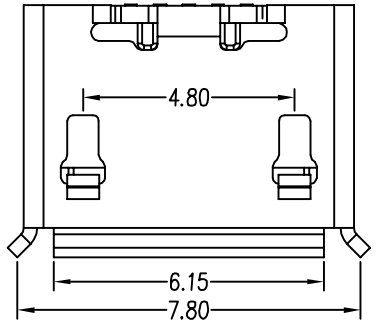

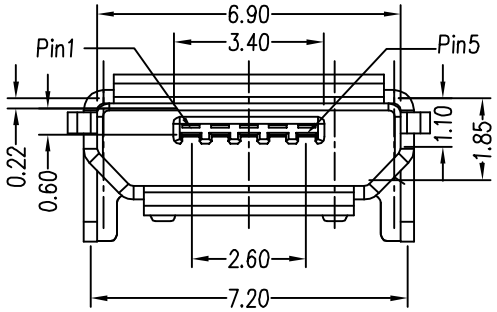

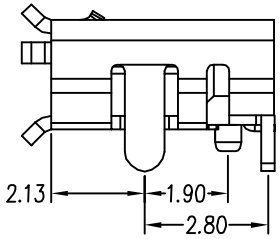

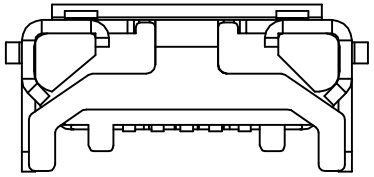

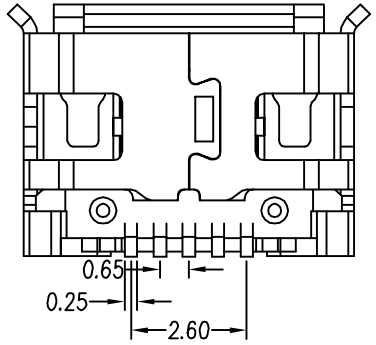

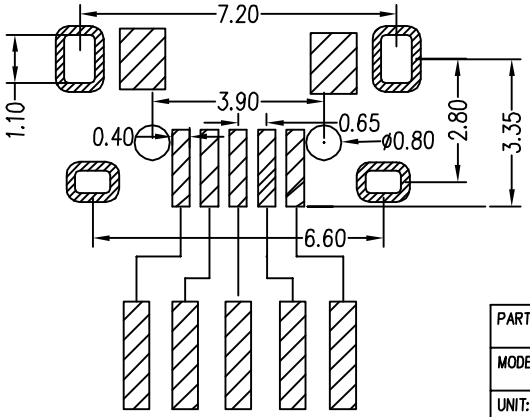

Notes:

1.Materials:

1.1 Housing: High temperature thermoplastic with g.f,UL94 v-0.

1.2 Contact: copper alloy,t=0.15mm.

1.3 Shell: copper alloy,t=0.30mm.

2.Specifications:

2.1. Current rating: 1 A Max.

2.2. Dielectric withstanding:voltage: 100 V(ac) for 1 min.

2.3. Contact resistance: 50 mW Max.

2.4. Insulation resistance: 100 MW Min.

2.5. Total mating force: 3.57 Kgf Max.

2.6. Total unmating force: 1.0 Kgf Min.0.81~2.05 Kgf Min.after 10000 insertion/extration cycles

2.7. Temperature range: -30°C~+80°C

PART NO: 98-MB05PMXX-01		MATERIAL:	Shenzhen Jiatel Hardware Electronics Co.,Ltd
MODEL NO: FD098		FINSH:	
UNIT: MM	SIZE: A4	COLOR:	TITLE: MIRCO USB 5S B TYPE牛角型DIP
TOLERANCE UNSPECIFIED		DR:	
.x	±0.25	CHK:	DWG NO: A098-01 / REV: A
.xx	±0.10		
.xxx	±0.05	APP:	SCALE: 1:1 / SHEET: 2008/12/18
ANG.	±1°		